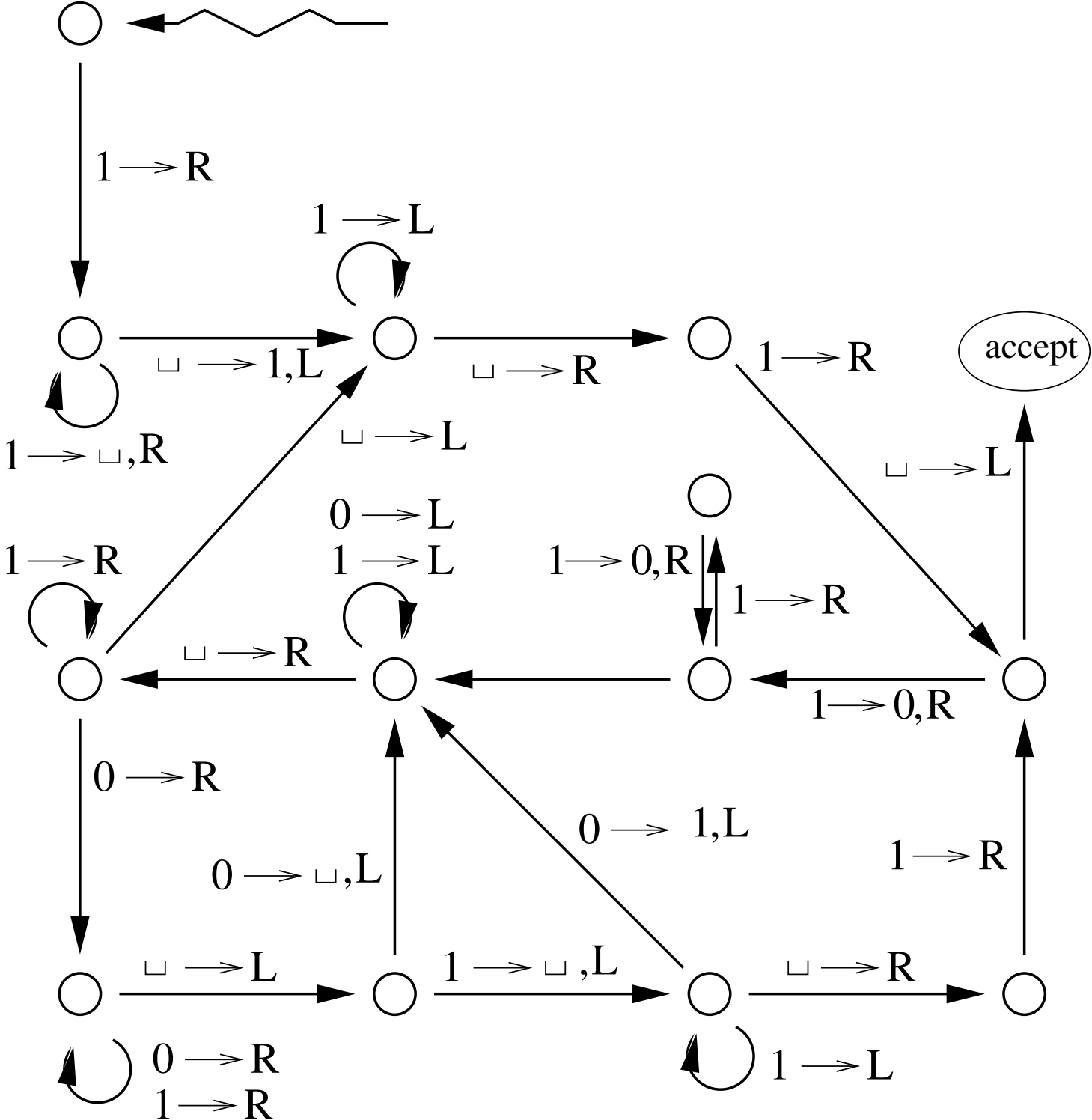
1 → R
1 → L
⊔ → 1,L
⊔ → R
1 → R
accept
1 → ⊔,R
⊔ → L
⊔ → L
0 → L
1 → L
1 → R
1 → 0,R
1 → R
⊔ → R
1 → 0,R
0 → R
0 → 1,L
0 → ⊔,L
1 → R
⊔ → L
1 → ⊔,L
⊔ → R
0 → R
1 → R
1 → L